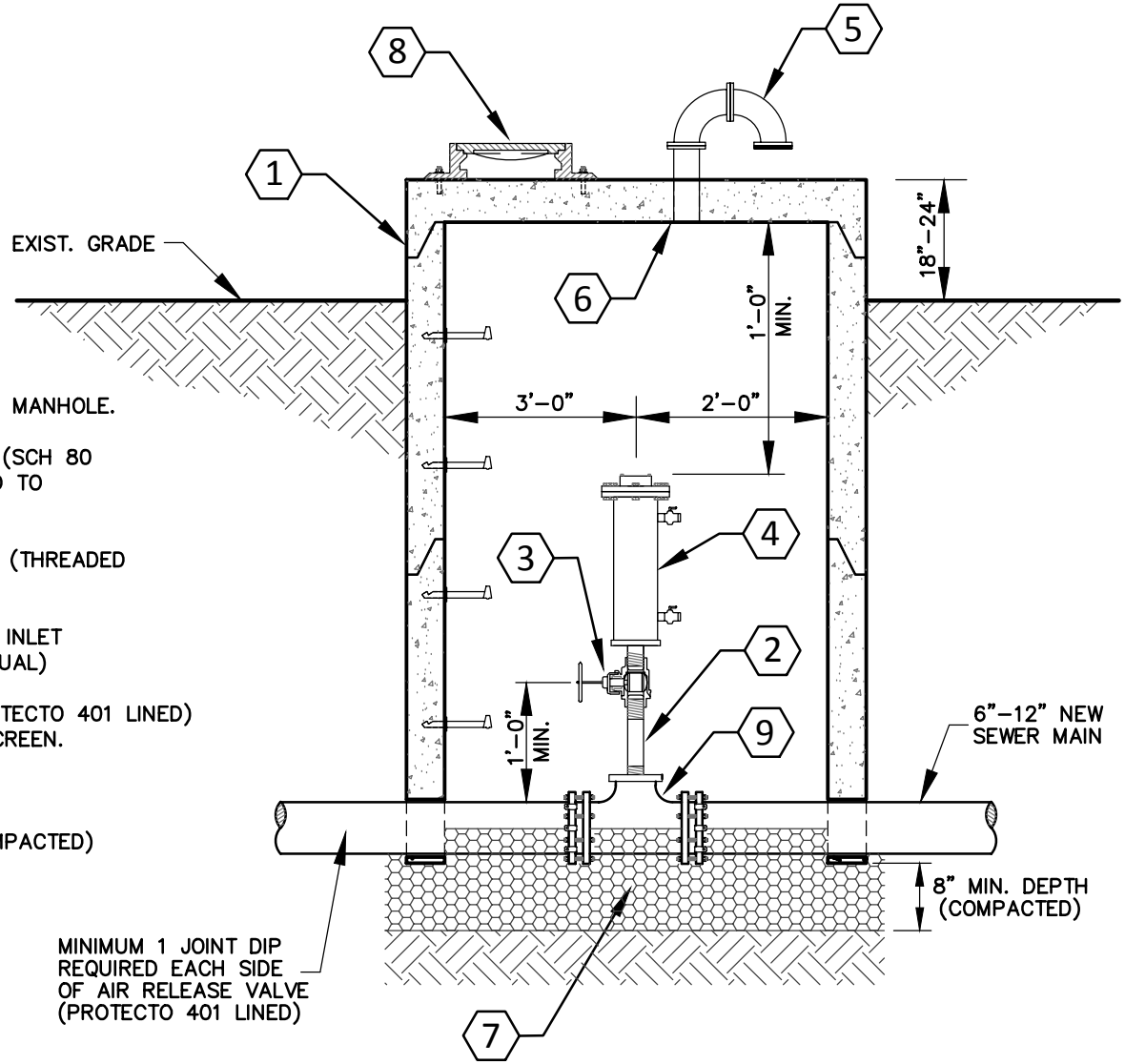

1. 5' DIAMETER PRECAST DOGHOUSE MANHOLE.
2. 2" 316 STAINLESS STEEL NIPPLE (SCH 80 THREADED)–LENGTH AS REQUIRED TO ACHIEVE PROPER ELEVATION.
3. 2" RESILIENT WEDGE GATE VALVE (THREADED WITH HANDWHEEL)
4. 2" AIR VALVE – WITH THREADED INLET (VENT O MAT RGX SERIES OR EQUAL)
5. 4" FLANGED 90° DIP BENDS (PROTECTO 401 LINED) WITH STAINLESS STEEL INSECT SCREEN.
6. SEALED PENETRATION.
7. #57 STONE, (MIN. 8" DEPTH, COMPACTED)
8. LOCKING RING & COVER, (COG STD. 71B–1)
9. TEE RESTRAINED MJ TO FLG (4" OUTLET) (PROTECTO 401 LINED) BLIND FLANGE WITH THREADED 2" TAP.

REVISED		DATE: 02–04–15	Standard Detail	OFFICE OF THE CITY ENGINEER GASTONIA, N.C.
		SCALE: NONE		
		DRAWN BY: TJ, MB	Sanitary Sewer Air Release Valve (Off Road)	
		CHECKED BY: GVS		FILE NO. 71B-17A
		CITY ENGINEER: CCB		